COOL BOOST SYSTEMS

ADVANCED DETONATION SUPPRESSION & FORCED INDUCTION COOLING

COOL BOOST WATER METHANOL SYSTEMS
SNS STAGE 2 V2 PROGRESSIVE
WIRING SCHEMATIC
BMS JB4

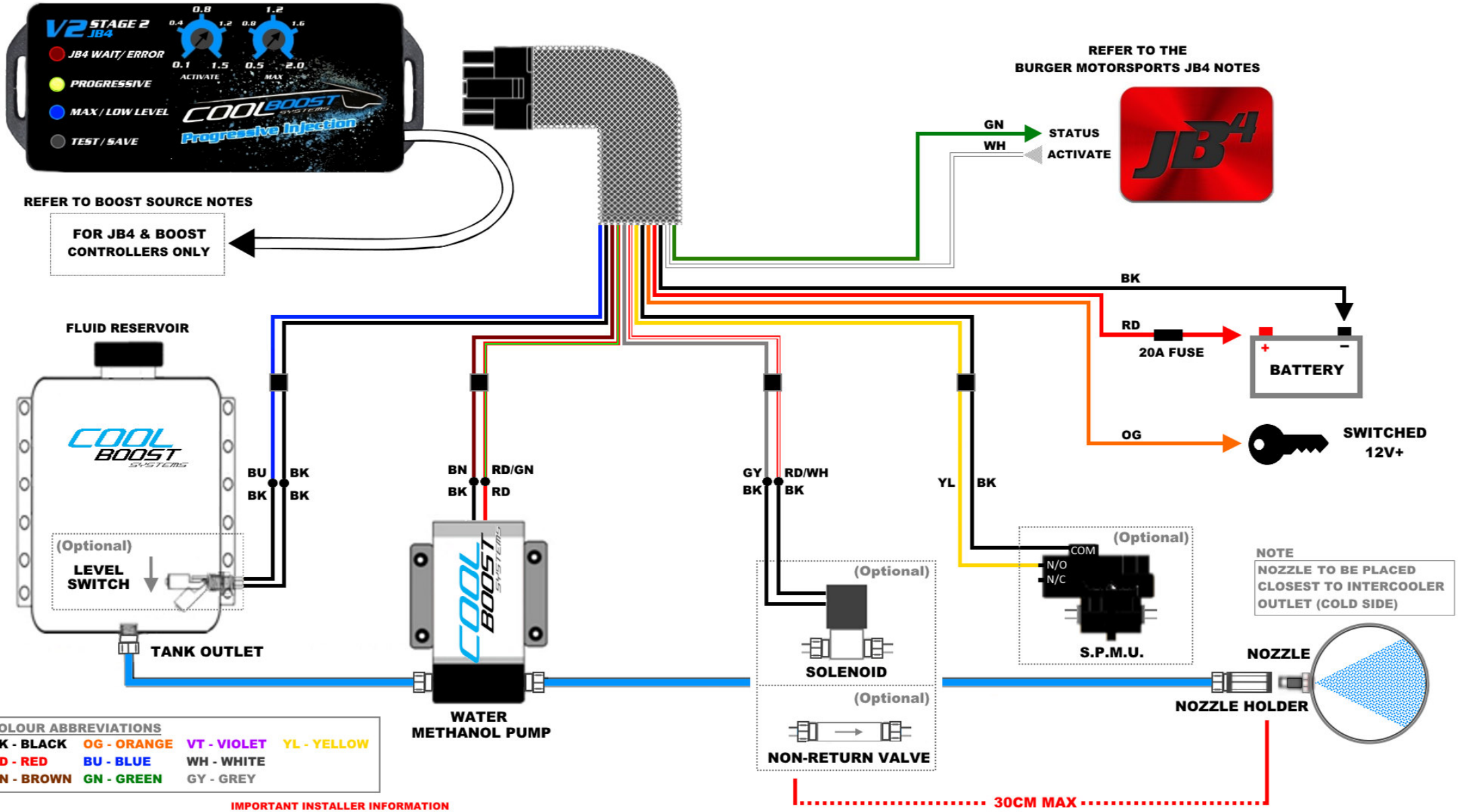

COLOUR ABBREVIATIONS

BK - BLACK	OG - ORANGE	VT - VIOLET	YL - YELLOW
RD - RED	BU - BLUE	WH - WHITE	
BN - BROWN	GN - GREEN	GY - GREY	

IMPORTANT INSTALLER INFORMATION

IF THE SYSTEM IS NOT EQUIPPED WITH A SOLENOID, INDIVIDUALLY TAPE UP AND ISOLATE THE GREY & RED/ WHITE WIRES
IF THE SYSTEM IS NOT EQUIPPED WITH A LEVEL SWITCH, CONNECT THE BLUE WIRE TO ITS PAIRED BLACK WIRE
IF THE SYSTEM IS NOT EQUIPPED WITH A SPMU, CONNECT THE YELLOW WIRE TO ITS PAIRED BLACK WIRE

REV 4A